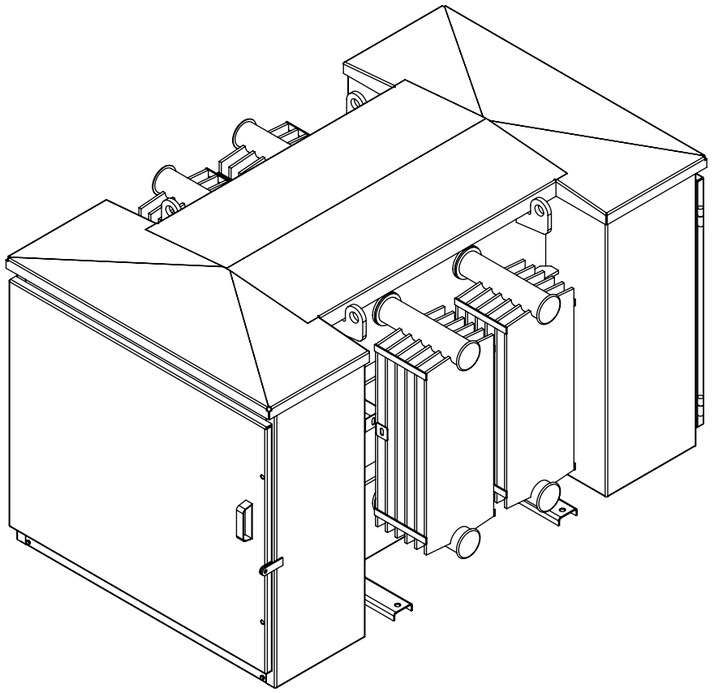

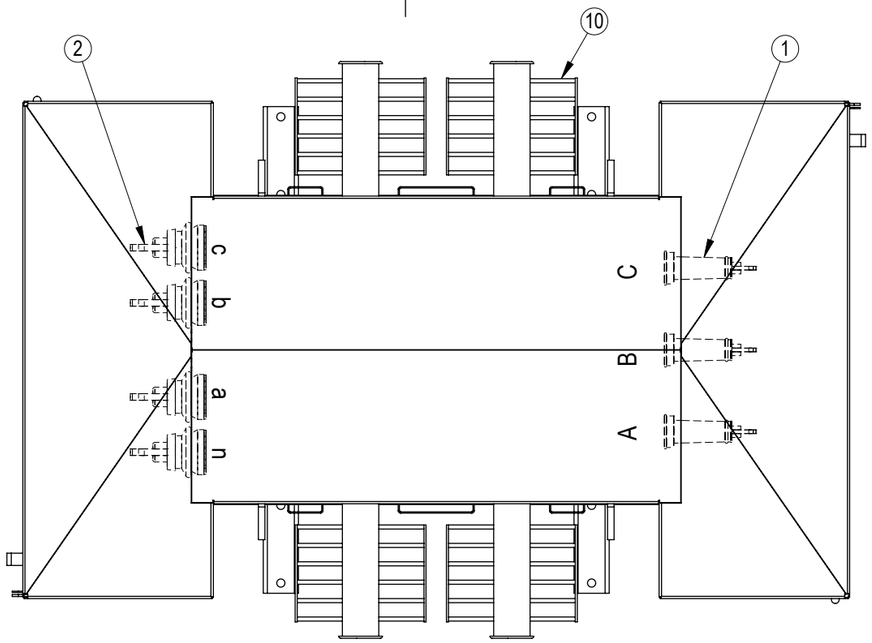

ITEM	DESCRIPTION
1	HV BUSHING C/B 2 PCE 11KV 160A
2	LV BUSHING No73 1050A 3.3kV
3	TAPSWITCH HANDLE
4	RATING PLATE (INSIDE LV DOOR)
5	OIL LEVEL INDICATOR
6	LIFTING LUG
7	EARTH STUD - M12 x 50 S/STEEL
8	HV SWITCHBOARD MOUNTING LONG NUTS - M10 x 15
9	LV SWITCHBOARD MOUNTING LONG NUTS - M10 x 15
10	COOLING RADIATOR
11	PADLOCKABLE HINGED ACCESS DOOR
12	DOOR, ALLEN HEAD BOLTS & RUBBER PLUGS
13	HOLD DOWN CHANNELS
14	25NB FILLER SOCKET & GALV PLUG
15	25NB DRAIN VALVE & GALV PLUG

kVA	OIL LITRES	UNTANKING MASS kg	TOTAL MASS APPROX kg
500	465	1080	2050

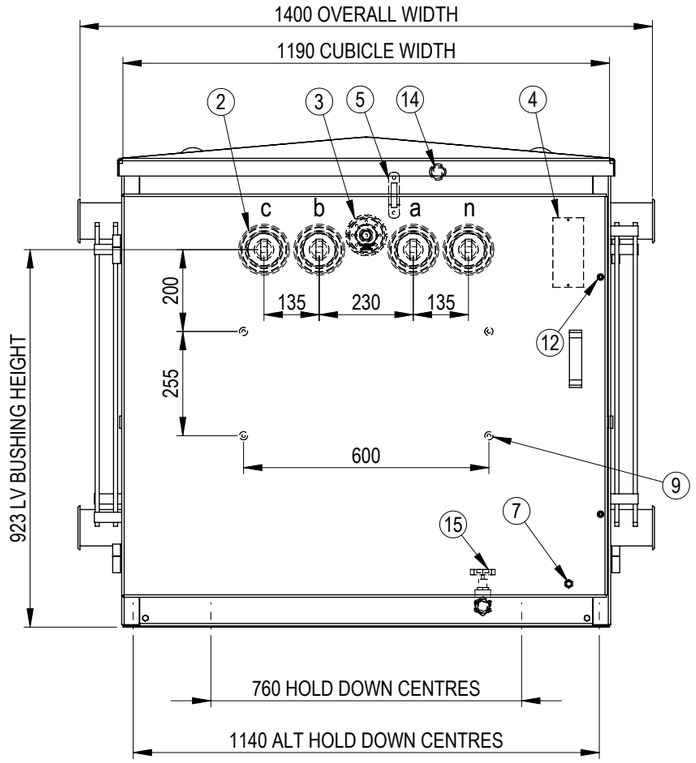

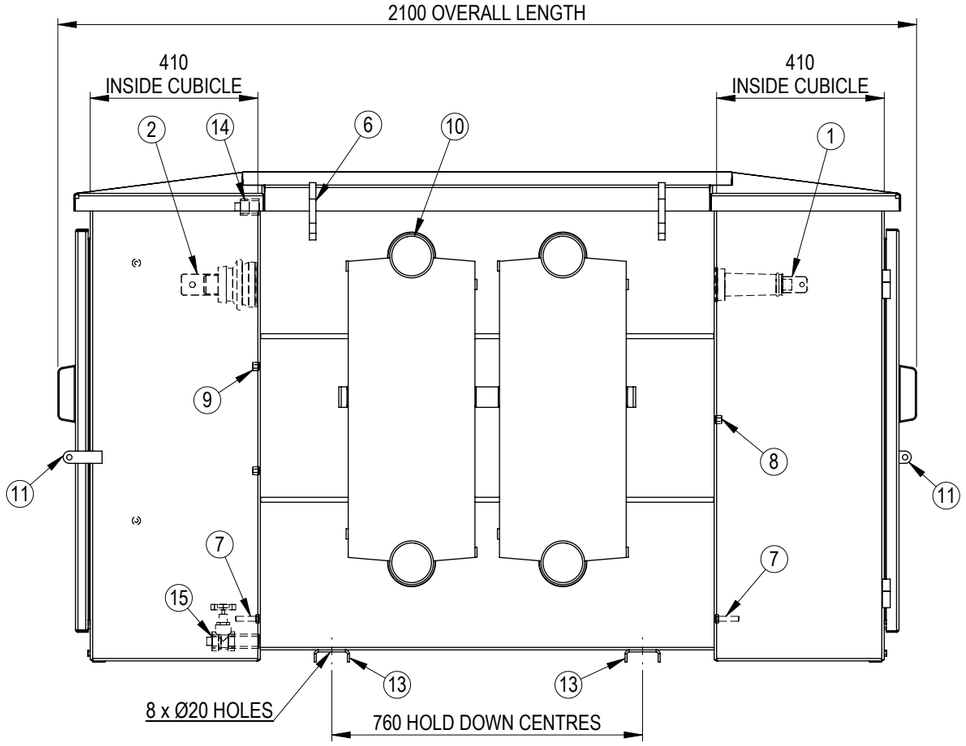

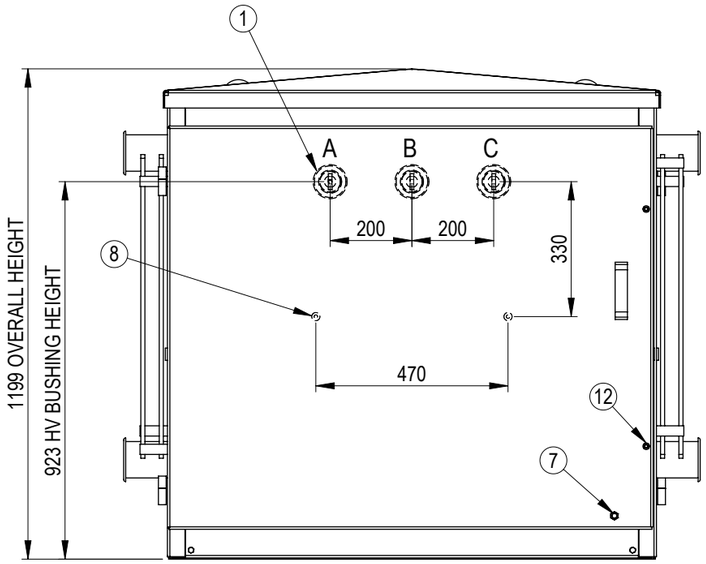

	NAME	SIGNATURE	DATE
DRAWN	SL		11/09/2017
CHECKED	OP		18/09/2017
APPROVED	OP		18/09/2017

SCALE AT A3 = 1:15

DO NOT SCALE DRAWING

WEIGHT: -

FINISH: -

MATERIAL: -

UNLESS SPECIFIED: DIMENSIONS ARE IN mm

TOLERANCES:
LINEAR: X = ± 1, .X = ± 0.5, .XX = ± 0.1
ANGULAR: X = ± 0.5°

TITLE:

GENERAL ARRANGEMENT
500kVA PADMOUNT
11kV/ 415 - 240V Dyn11

Copyright © ETEL Limited. All rights reserved.
No part of this document may be reproduced nor information contained hereon divulged to third parties without written consent from ETEL Limited.

ETEL Distribution Transformers

SHEET	DWG NO.	REV.
1 OF 1	904.0500.3401	B

REV	DESCRIPTION	AUTHORITY	DRAWN	DATE	APPD	DATE
B	TAPSWITCH CHANGED TO WALL MOUNTED	DESIGN IMPROVEMENT	SL	23/01/2018	JS	23/01/2018

REVISION INFORMATION