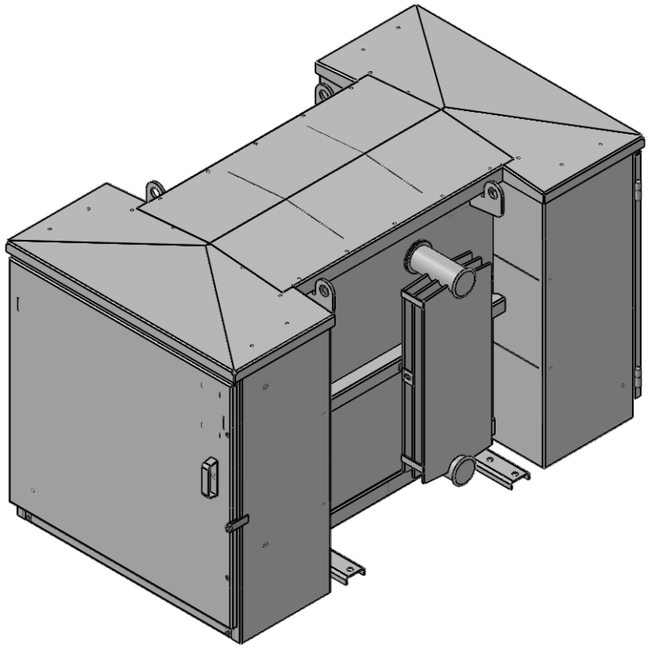

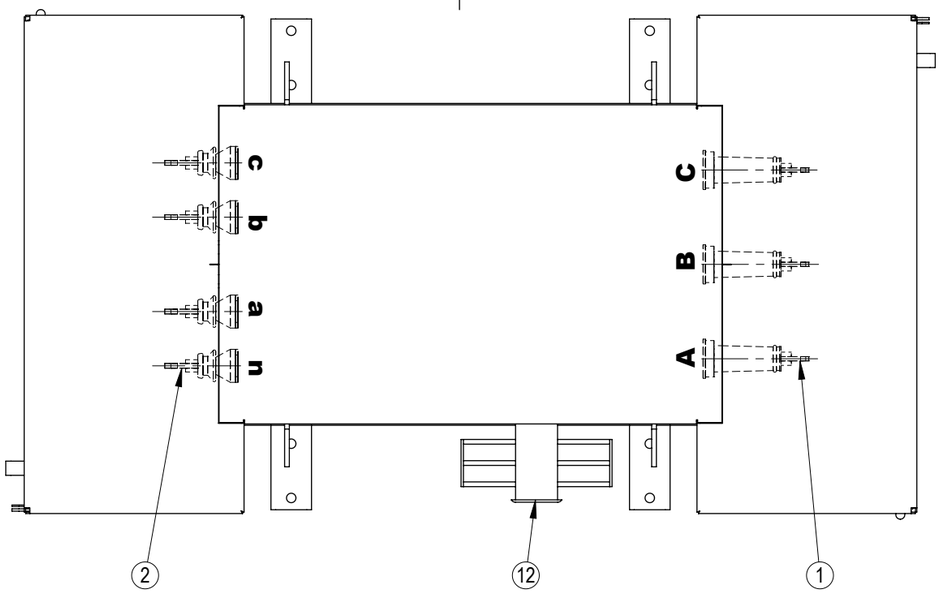

ITEM	DESCRIPTION
1	HV BUSHING CABLEBOX, 2 Pce, 11000V, 160A
2	LV BUSHING ESAA No. 72, 2 Pce, 3300V, 500A
3	TAPSWITCH HANDLE
4	RATING PLATE (POSITIONED INSIDE LV DOOR)
5	OIL LEVEL GAUGE
6	LIFTING LUG
7	EARTH STUD M12 S/STEEL
8	HV SWITCHBOARD BKT. M10 x 20mm LONG NUTS
9	LV SWITCHBOARD BKT. M10 x 20mm LONG NUTS
10	DOOR ALLEN KEY BOLT & RUBBER PLUG
11	PADLOCKABLE HINGED ACCESS DOOR
12	COOLING RADIATOR

APPROXIMATE MASSES	kg
OIL (353Litres)	310
UNTANKING MASS	551
TOTAL MASS	1230

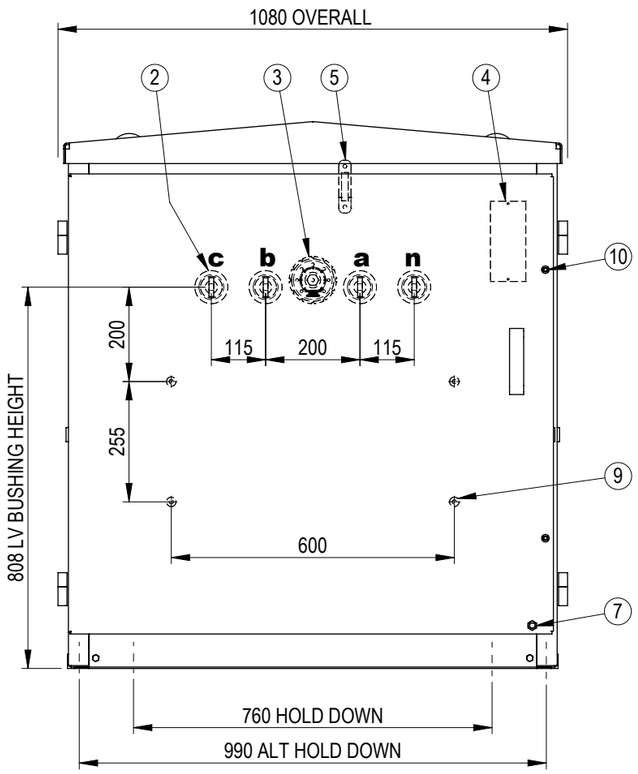

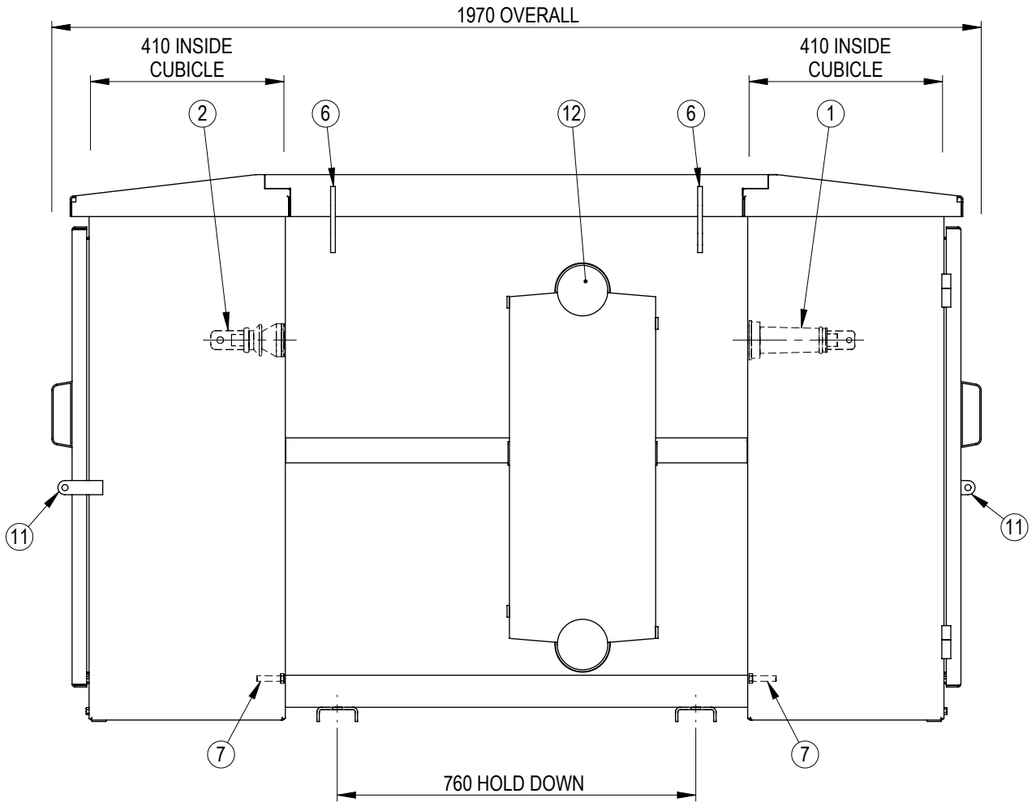

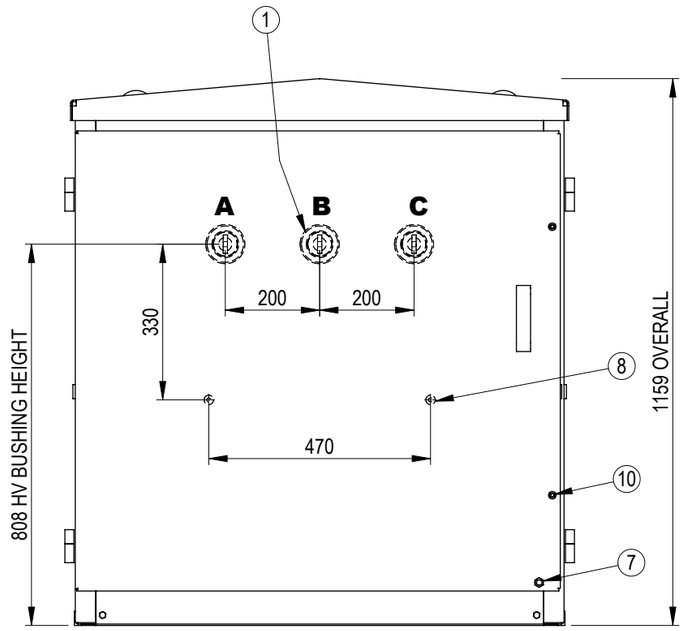

	NAME	SIGNATURE	DATE
DRAWN	SL		26/10/2017
CHECKED	JS		30/10/2017
APPROVED	JS		30/10/2017

SCALE AT A3 = 1:13

DO NOT SCALE DRAWING

WEIGHT: -

FINISH: -

MATERIAL: -

UNLESS SPECIFIED:
DIMENSIONS ARE IN mm

TOLERANCES:
LINEAR: X = ± 1, .X = ± 0.5, .XX = ± 0.1
ANGULAR: X = ± 0.5°

TITLE:

GENERAL ARRANGEMENT
200kVA 3Ph PADMOUNT TRANSFORMER
11kV / 415 - 240V Dyn11

Copyright © ETEL Limited. All rights reserved.
No part of this document may be reproduced nor information contained hereon divulged to third parties without written consent from ETEL Limited.

ETEL
Distribution Transformers

SHEET	DWG NO.	REV.
1 OF 1	904.0200.3407	A

REV	DESCRIPTION	AUTHORITY	DRAWN	DATE	APPD	DATE
A	INITAL RELEASE	INITIAL RELEASE	SL	26/10/2017	JS	30/10/2017

REVISION INFORMATION