| APPROXIMATE MASSES | kg |
|---|---|
| OIL 305 litre | 268 |
| UNTANKING MASS | 450 |
| TOTAL | 955 |

| ITEM | DESCRIPTION |
|---|---|
| 1 | HV BUSHING 12kV, No75 30A -4 SHED EYEBOLT |
| 2 | LV BUSHING -3.6kV No72 200A |
| 3 | RATING PLATE |
| 4 | LIFTING LUG |
| 5 | OIL LEVEL SIGHT GLASS |
| 6 | EARTH TERMINAL -STAINLESS STEEL |
| 7 | TAPSWITCH |
| 8 | CROSSARM HANGER ASSY |
| 9 | RADIATOR |

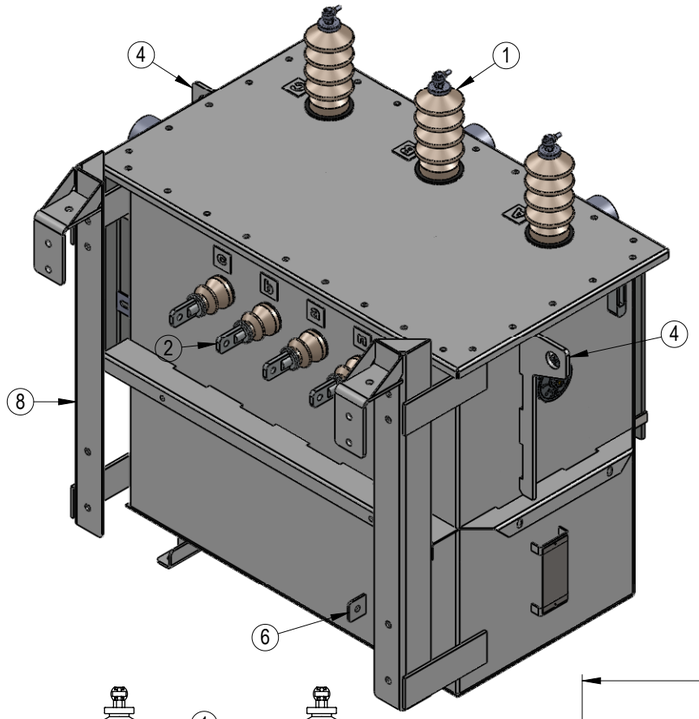


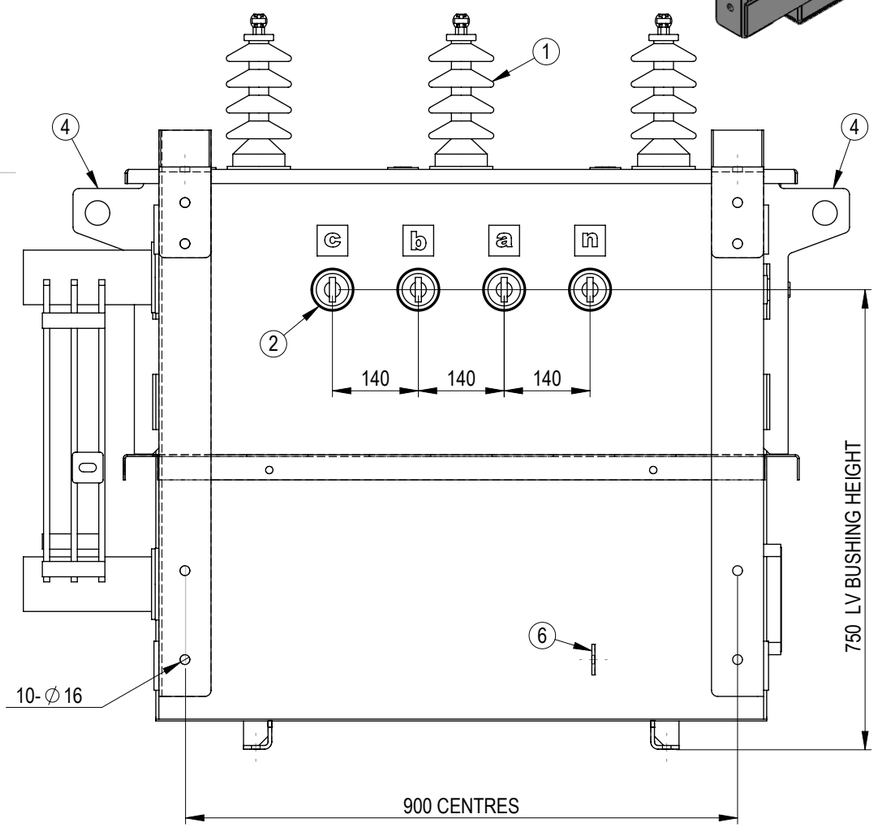


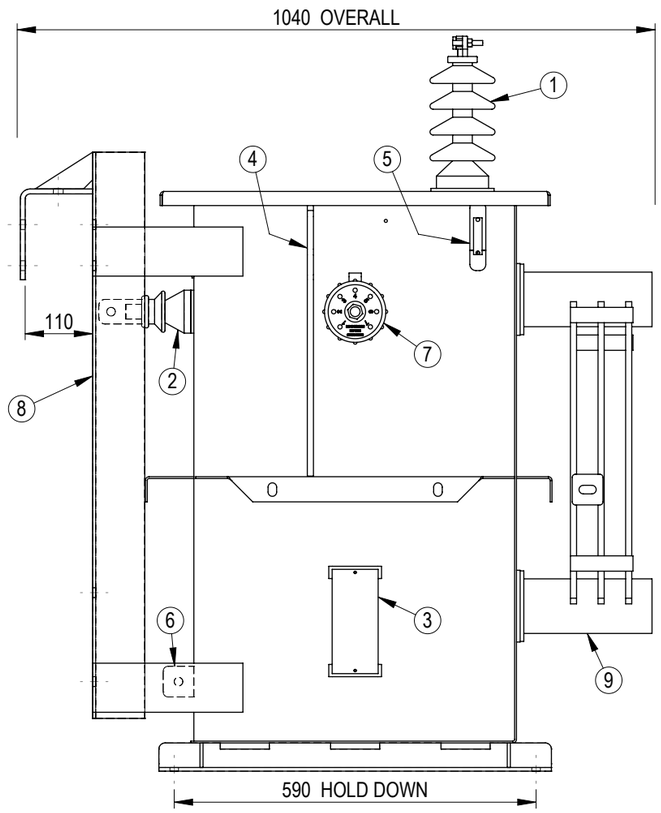


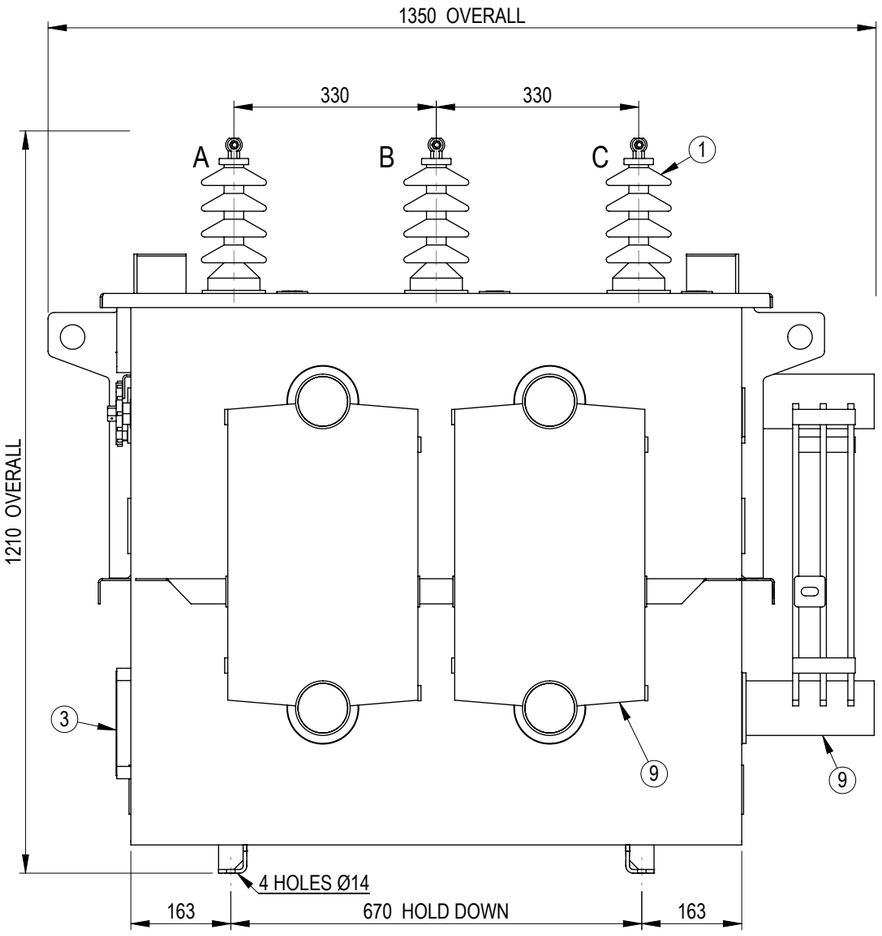


| | NAME | SIGNATURE | DATE |
|---|---|---|---|
| DRAWN | AR | | 16/03/2016 |
| CHECKED | VZ | | 16/03/2016 |
| APPROVED | VZ | | 16/03/2016 |

SCALE AT A3 = 1:10

DO NOT SCALE DRAWING

WEIGHT: -kg

FINISH: -

MATERIAL: -

UNLESS SPECIFIED: DIMENSIONS ARE IN mm

TOLERANCES:
LINEAR: X = ± 1, .X = ± 0.5, .XX = ± 0.1
ANGULAR: X = ± 0.5°

TITLE:

# GENERAL ARRANGEMENT
# 150kVA TRANSFORMER POLE CROSSARM

## 3PH 11000/415-240V Dyn11

Copyright © ETEL Limited. All rights reserved.
No part of this document may be reproduced nor information contained hereon divulged to third parties without written consent from ETEL Limited.

ETEL Distribution Transformers

| SHEET | DWG NO. | REV. |
|---|---|---|
| 1 OF 1 | 904.0150.3001 | A |

| REV | DESCRIPTION | AUTHORITY | DRAWN | DATE | APPD | DATE |
|---|---|---|---|---|---|---|
| A | INITAL RELEASE | CUSTOMER REQUEST | AR | 16/03/16 | VZ | 16/03/16 |

REVISION INFORMATION