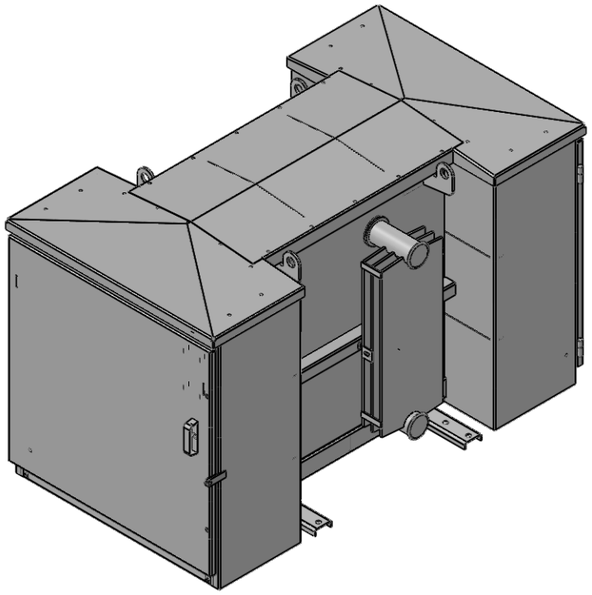

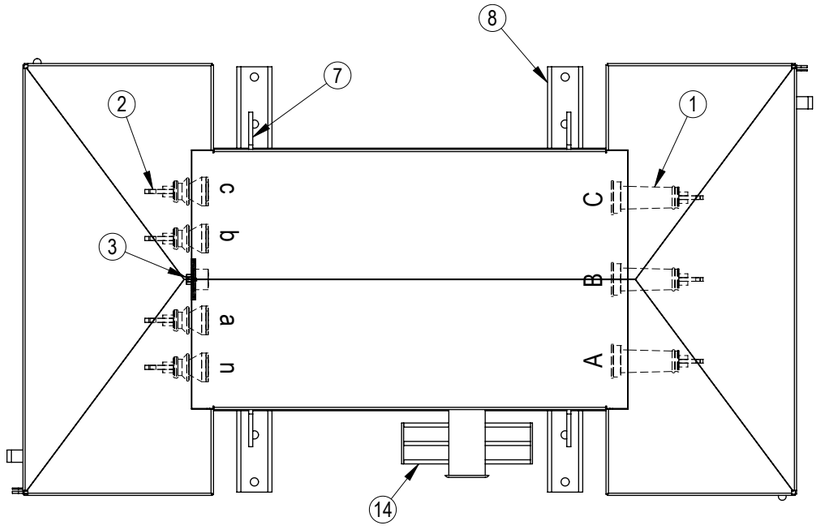

ITEM	DESCRIPTION
1	HV BUSHING CB, 2 PCE, 11kV, M10 Cu, 160A
2	LV BUSHING No 72, 2PCE, 3.6kV, M16 Cu, 500A
3	TAPSWITCH HANDLE
4	RATING PLATE
5	OIL LEVEL INDICATOR SIGHT GLASS
6	EARTH STUD M12 SS
7	LIFTING LUG
8	HOLD DOWN CHANNEL
9	HV ACCESS DOOR HINGED & PADLOCKABLE
10	LV ACCESS DOOR HINGED & PADLOCKABLE
11	LV SWITCHBOARD BRACKETS M10 x 15 SS NUTS
12	HV SWITCHBOARD BRACKETS
13	DOOR, ALLEN HEAD BOLTS & RUBBER PLUGS
14	COOLING RADIATOR

APPROXIMATE MASS	kg
OIL (328 LITRES)	290
UNTANKING MASS	475
TOTAL	1140

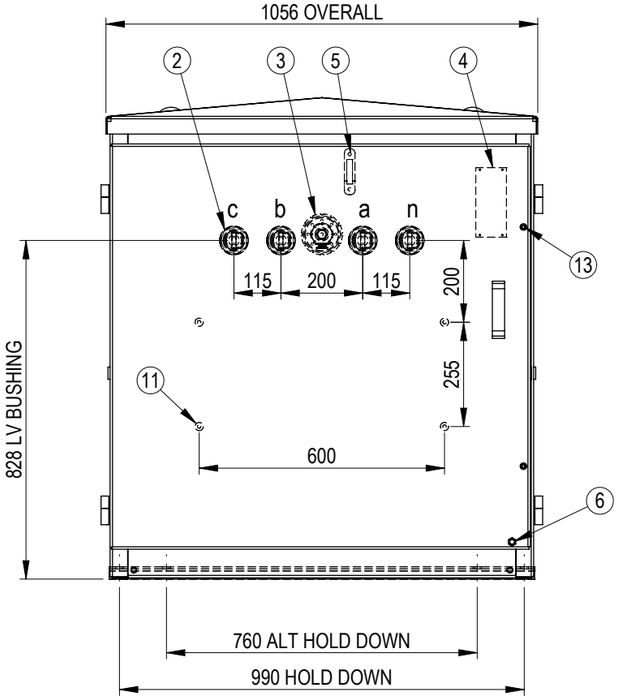

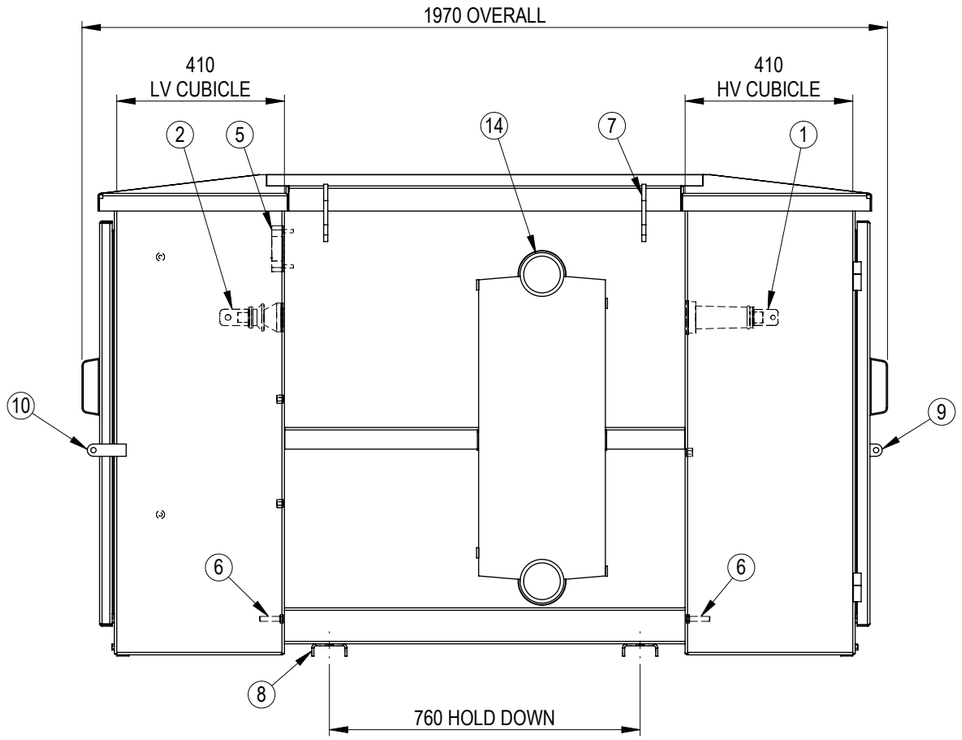

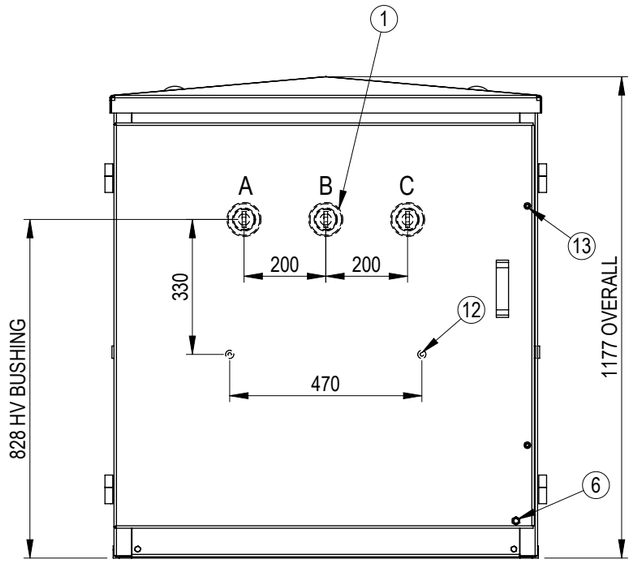

REV	DESCRIPTION	AUTHORITY	DRAWN	DATE	APPD	DATE
A	INITAL RELEASE	INITIAL RELEASE	SL	1/04/2019	JS	3/04/2019

REVISION INFORMATION

	NAME	SIGNATURE	DATE
DRAWN	SL		1/04/2019
CHECKED	OP		3/04/2019
APPROVED	JS		3/04/2019

SCALE AT A3 = 1:15

DO NOT SCALE DRAWING

WEIGHT: -

FINISH: -

MATERIAL: -

UNLESS SPECIFIED: DIMENSIONS ARE IN mm

TOLERANCES:
LINEAR: X = ± 1, .X = ± 0.5, .XX = ± 0.1
ANGULAR: X = ± 0.5°

TITLE:

GENERAL ARRANGEMENT
150kVA 3Ph PADMOUNT
11kV / 415-240V Dyn11

Copyright © ETEL Limited. All rights reserved.
No part of this document may be reproduced nor information contained hereon divulged to third parties without written consent from ETEL Limited.

ETEL Distribution Transformers

SHEET	DWG NO.	REV.
1 OF 1	904.0150.3407	A