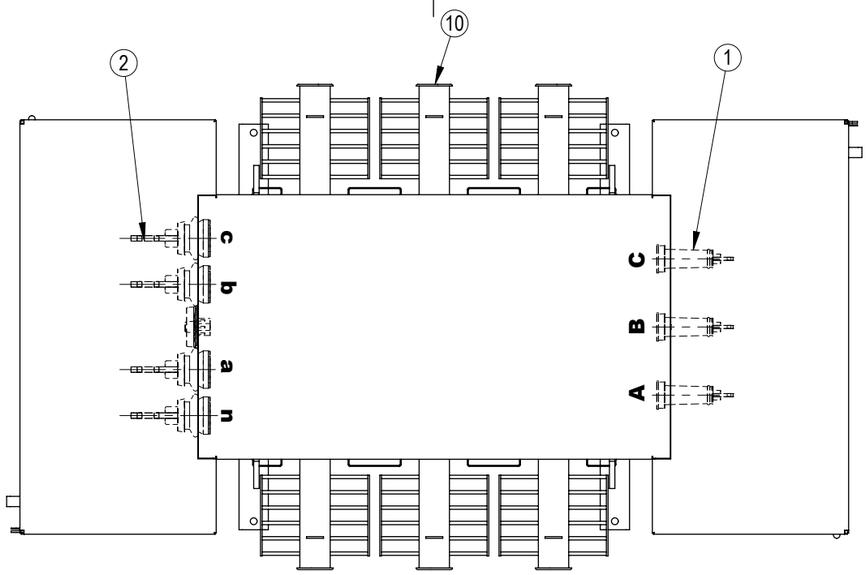

ITEM	DESCRIPTION
1	HV BUSHING 11kV 160A
2	LV BUSHING 3.3kV 2000A
3	TAPSWITCH HANDLE
4	RATING PLATE (INSIDE LV DOOR)
5	OIL LEVEL GAUGE
6	LIFTING LUG
7	EARTH STUD - M12 S/STEEL
8	HV SWITCHBOARD MOUNTING LONG NUTS - M10x15
9	LV SWITCHBOARD MOUNTING LONG NUTS - M10x15
10	COOLING RADIATOR
11	PADLOCKABLE HINGED BOLTS & RUBBER PLUGS
12	DOOR, ALLEN HEAD BOLT & RUBBER PLUGS
13	HOLD DOWN CHANNELS
14	25NB FILLER SOCKET & GALV PLUG
15	25NB DRAIN VALVE & GALV PLUG

APPROXIMATE MASS	kg
OIL (695 LITRES)	610
UNTANKING MASS	1670
TOTAL	3235

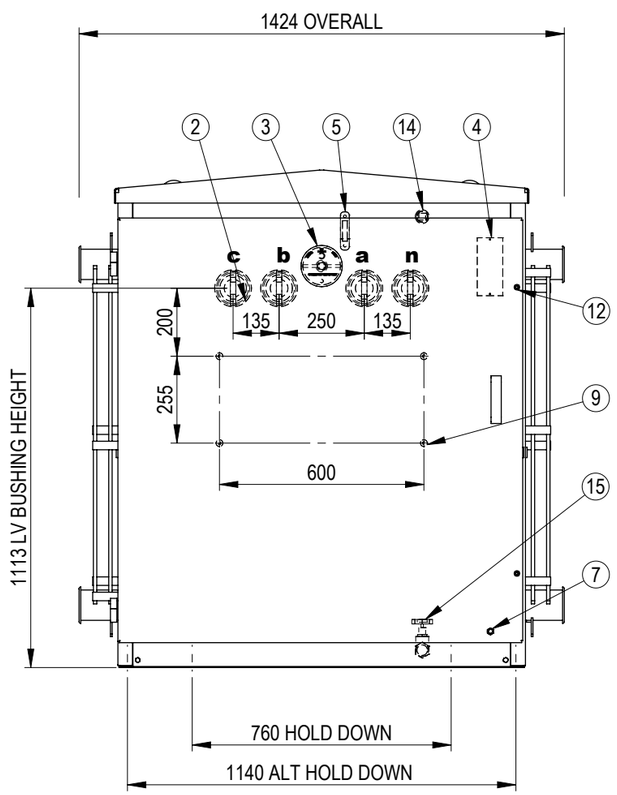

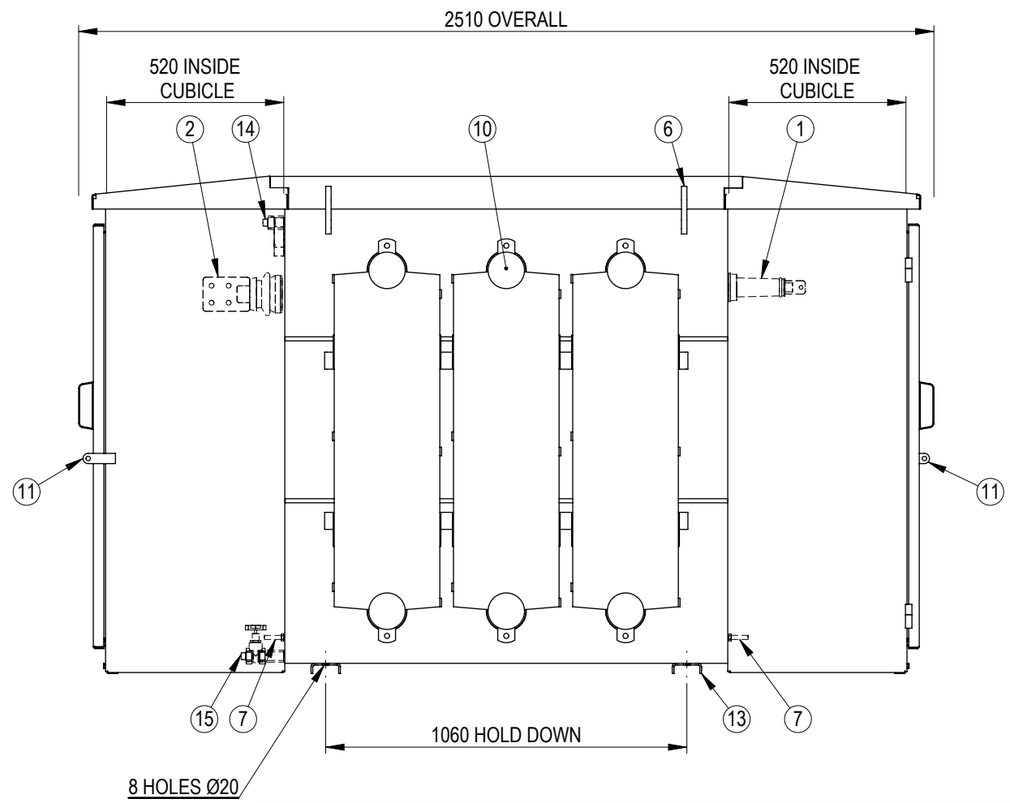

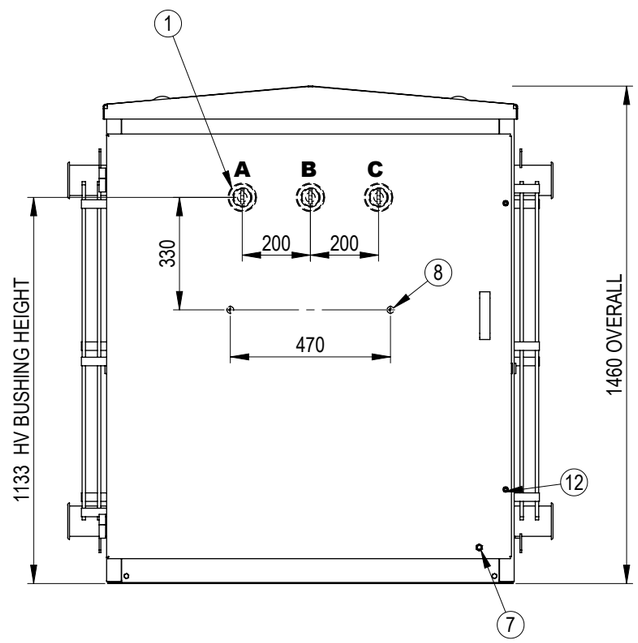

	NAME	SIGNATURE	DATE
DRAWN	TK		16/06/2017
CHECKED	OP		16/06/2017
APPROVED	JS		16/06/2017

SCALE AT A3 = 1:18

DO NOT SCALE DRAWING

WEIGHT: -

FINISH: -

MATERIAL: -

UNLESS SPECIFIED:
DIMENSIONS ARE IN mm

TOLERANCES:
LINEAR: X = ± 1, .X = ± 0.5, .XX = ± 0.1
ANGULAR: X = ± 0.5°

TITLE:

GENERAL ARRANGEMENT
1000kVA 3Ph PADMOUNT TRANSFORMER
11kV / 415 - 240V Dyn11

Copyright © ETEL Limited. All rights reserved.
No part of this document may be reproduced nor information contained hereon divulged to third parties without written consent from ETEL Limited.

ETEL Distribution Transformers

SHEET	DWG NO.	REV.
1 OF 1	904.1000.3406	A

REV	DESCRIPTION	AUTHORITY	DRAWN	DATE	APPD	DATE
A	INITAL RELEASE	INITIAL RELEASE	OP	16/06/2017	JS	16/06/2017

REVISION INFORMATION